Pushing Performance

People | Power | Partnership

HARTING
Current Measurement Technique

Transforming customer wishes into concrete solutions

The HARTING Technology Group is skilled in the fields of electrical, electronic and optical connection, transmission and networking, as well as in manufacturing, mechatronics and software creation. The Group uses these skills to develop customised solutions and products such as connectors for energy and data transmission applications including, for example, mechanical engineering, rail technology, wind energy plants, factory automation and the telecommunications sector. In addition, HARTING also produces electro-magnetic components for the automobile industry and offers solutions in the field of Enclosures and Shop Systems.
The HARTING Group currently comprises 51 subsidiary companies and worldwide distributors employing a total of more than 4,200 staff.

HARTING Subsidiary company HARTING Representatives

We aspire to top performance.

Connectors ensure functionality. As core elements of electrical and optical wiring, connection and infrastructure technologies, they are essential in enabling the modular construction of devices, machines and systems across a very wide range of industrial applications. Their reliability is a crucial factor guaranteeing smooth functioning in the manufacturing area, in telecommunications, applications in medical technology – in fact, connectors are at work in virtually every conceivable application area. Thanks to the consistent further development of our technologies, customers enjoy investment security and benefit from durable, long term functionality.

Always at hand, wherever our customers may be.

Increasing industrialization is creating growing markets characterised by widely diverging demands and requirements. The search for perfection, increasingly efficient processes and reliable technologies is a common factor in all sectors across the globe.

HARTING is providing these technologies – in Europe, America and Asia. The HARTING professionals at our international subsidiaries engage in close, partnership based interaction with our customers, right from the very early product development phases, in order to realise customer demands and requirements in the best possible manner.

Our people on location form the interface to the centrally coordinated development and production departments. In this way, our customers can rely on consistently high, superior product quality – worldwide.

Our claim: Pushing Performance.

HARTING provides more than optimally attuned components. In order to serve our customers with the best possible solutions, HARTING is able to contribute a great deal more and play a closely integrative role in the value creation process.

From ready assembled cables through to control racks or ready-to-go control desks: Our aim is to generate the maximum benefits for our customers – without compromise!

Quality creates reliability – and warrants trust.

The HARTING brand stands for superior quality and reliability – worldwide. The standards we set are the result of consistent, stringent quality management that is subject to regular certifications and audits.

EN ISO 9001, the EU Eco-Audit and ISO 14001:2004 are key elements here. We take a proactive stance to new requirements, which is why HARTING ranks among the first companies worldwide to have obtained the new IRIS quality certificate for rail vehicles.

HARTING technology creates added value for customers.
Technologies by HARTING are at work worldwide. HARTING's presence stands for smoothly functioning systems, powered by intelligent connectors, smart infrastructure solutions and mature network systems. In the course of many years of close, trust-based cooperation with its customers, the HARTING Technology Group has advanced to one of the worldwide leading specialists for connector technology. Extending beyond the basic functionalities demanded, we offer individual customers specific and innovative solutions. These tailored solutions deliver sustained effects, provide investment security and enable customers to achieve strong added value.

Opting for HARTING opens up an innovative, complex world of concepts and ideas.
In order to develop connectivity and network solutions serving an exceptionally wide range of connector applications and task scopes in a professional and cost optimised manner, HARTING not only commands the full array of conventional tools and basic technologies. Over and beyond these capabilities, HARTING is constantly harnessing and refining its broad base of knowledge and experience to create new solutions that ensure continuity at the same time. In securing this know-how lead, HARTING draws on a wealth of sources from both in-house research and the world of applications alike.
Salient examples of these sources of innovative knowledge include microstructure technologies, 3D design and construction technology, as well as high temperature or ultrahigh frequency applications that are finding use in telecommunications or automation networks, in the automotive industry, or in industrial sensor and actuator applications, RFID and wireless technologies, in addition to packaging and housing made of plastics, aluminum or stainless steel.

HARTING solutions extend across technology boundaries.
Drawing on the comprehensive resources of the group's technology pool, HARTING devises practical solutions for its customers. Whether this involves industrial networks for manufacturing automation, or hybrid interface solutions for wireless telecommunication infrastructures, 3D circuit carriers with microstructures, or cable assemblies for high-temperature applications in the automotive industry – HARTING technologies offer far more than components, and represent mature, comprehensive solutions attuned to individual customer requirements and wishes. The range covers ready-to-use cable configurations, completely assembled backplanes and board system carriers, as well as fully wired and tested control panels.
In order to ensure the future proof design of RF- and EMC-compatible interface solutions, the central HARTING laboratory (certified to EN 45001) provides simulation tools, as well as experimental, testing and diagnostics facilities all the way through to scanning electron microscopes. In the selection of materials and processes, lifecycle and environmental aspects play a key role, in addition to product and process capability considerations.

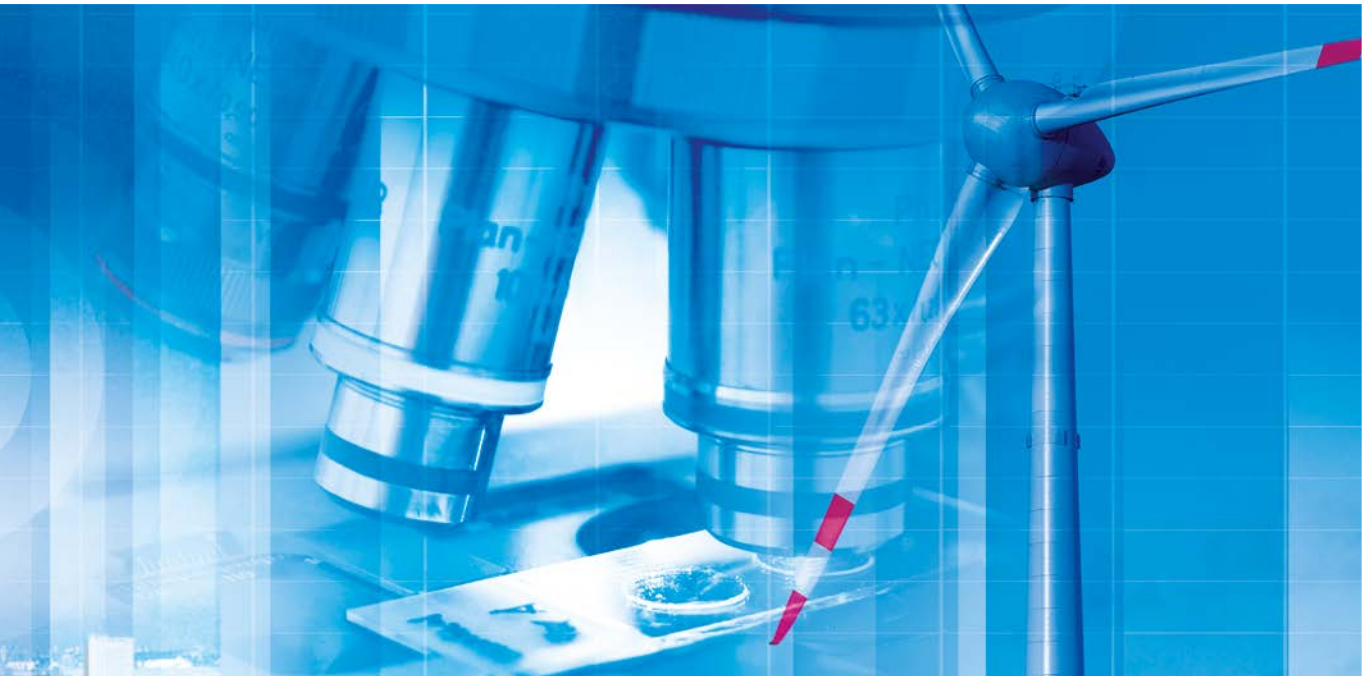

HARTING knowledge is practical know-how generating synergy effects.

HARTING commands decades of experience with regard to the applications conditions of connectors in telecommunications, computer and network technologies and medical technologies, as well as industrial automation technologies, such as the mechanical engineering and plant engineering areas, in addition to the power generation industry or the transportation sector. HARTING is highly conversant with the specific application areas in all of these technology fields.

The key focus is on applications in every solution approach. In this context, uncompromising, superior quality is our hallmark. Every new solution found will invariably flow back into the HARTING technology pool, thereby enriching our resources. And every new solution we go on to create will draw on this wealth of resources in order to optimise each and every individual solution. In this way, HARTING is synergy in action.

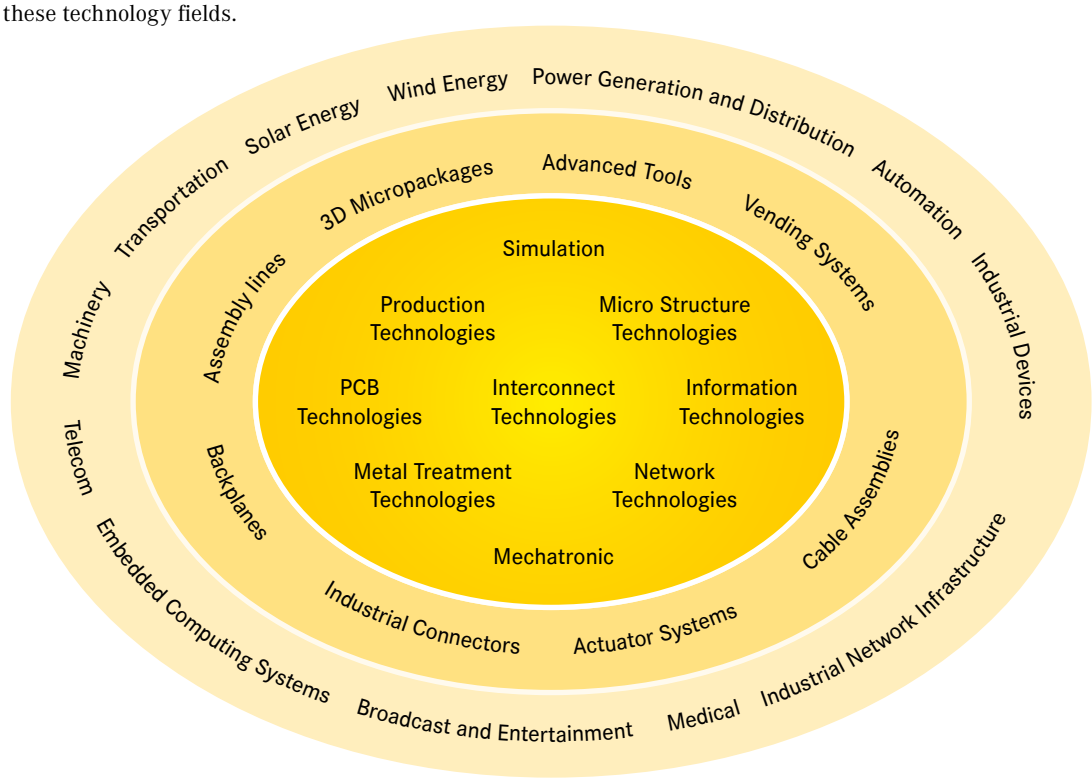

Field of applications

HARTING Hall effect current sensors are used for current measurement in power electronic applications. The hall effect sensors can measure different kinds of currents (AC, DC, pulsed, etc.)

- Generators
- Electrical drives
- Switch mode power supplies
- USV
- Other power electronic applications

Certified according to EN ISO 9001 in design/development, production, installation and servicing

Approvals:

for Industrial equipement DIN EN 50178:
Electronic equipment for use in power installations

for Railway equipement DIN EN 50155:
Railway applications –Electronic Devices on Rolling Stock

General information:

It is the user's responsibility to check whether the components illustrated in this catalogue comply with different regulations from those stated in special fields of application which we are unable to foresee.

We reserve the right to modify designs in order to improve quality, keep pace with technological advancement or meet particular requirements in production.

No part of this catalogue may be reproduced in any form (print, photocopy, microfilm or any other process) or processed, duplicated or distributed by means of electronic systems without the prior written consent of HARTING Electric GmbH & Co. KG, Espelkamp. We are bound by the German version only.

© HARTING Electric GmbH & Co. KG, Espelkamp – All rights reserved, including those of the translation.

Contents

Page

HARTING Hall effect current sensors and measurement transformers 8
Customer-specific solutions 9
Measurement principles Current Transformers 10
Measurement principles Hall Effect Current Sensors 11

Current sensors HCM
Current sensor HCM 200 A 12
Current sensor HCM 200 A Small 14
Current sensor HCM 300 A 16
Current sensor HCM 300 A Small 18
Current sensor HCM 500 A 20
Current sensor HCM 1000 A 22
Current sensor HCM 2000 A 24
Current sensor HCM 2000 A 1:4000 26

Current sensors HCMR
Current sensor HCMR 500 A 28
Current sensor HCMR 1000 A 30
Current sensor HCMR 1000 A 1:4000 32
Current sensor HCMR 2000 A 34
Current sensor HCMR 2000 A 1:4000 36

Open-loop sensors
Current sensors HCME 100 A ... 800 A 38

Definitions 40
Remarks 41

Current transformers
Current transformer 4000/5 A 42
Current transformer 7000/5 A 44

Residual current transformers
Residual current transformer 10 A 46

Features

- No-contact measurement of current
- Precise measurement results
- Hall effect current sensors for power electronics
- Measurement transformers and residual current transformers for energy measurement and safety technology
- Customer-specific solutions

Current sensors and current transformers for measurement are electromechanical components that provide an accurate real-time representation of the input and output currents for energy consumers and energy producers. They use the magnetic field created by the current flowing through the conductor to carry out an electrically isolated measurement.

HARTING is pursuing two directions for current measurements:

"Active" current sensors are based on the well-established Hall effect principle; they are ideally suited for usage in power electronics since they can measure DC, AC and mixed currents with high precision. The measurement signals are then used for precisely controlling the power semiconductors and for monitoring performance and operability.

Current transformers for measurement and residual current transformers are low-impedance transformers that can convert high currents (proportionally and without changing the phases) to smaller currents. A distinction is made between measurement transformers and protective transformers. Measurement transformers are used for very precise measurements of energy consumption. Protective transformers, on the other hand, deliver evaluable signals for protective facilities.

Customer-specific solutions

Are you unable to find a matching solution in our HARTING portfolio? Don't worry: we will design and manufacture our current measurement technique to fit your individual requirements.

Anything is possible – from small modifications to a complete new product.

Our high level of vertical manufacturing integration and our platform-specific design enable us accommodate your wishes, even for small production batches.

Customer-specific tests:

- Electrical and mechanical tests can be carried out in our accredited test laboratory according to your requirements

Customised termination technology:

- Your preferred connector on the sensor
- A specific connector position
- Complete cable assembly for connecting the sensors within your application

New design:

- From design concept to series production

Adaptation of the electrical characteristics to meet customer requirements:

- Transmission ratios
- Output signal
- Voltage supply

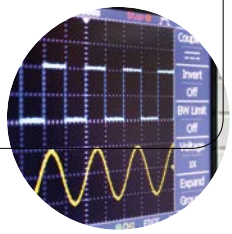

Measurement principles

Current transformer

For detecting alternating currents in energy technology

Transformer	Residual current transformer
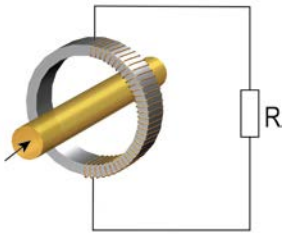	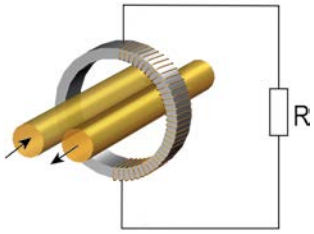
Accuracy class: up to 0.2S	Accuracy class: 5P or 10P
50 – 60 Hz (typical)	5 – 400 Hz
Test voltage: 3 kV	Suitable for high short-term currents
Output signal of 5 A or 1 A at rated current	
Verifiable	
Transformers are based on the design of a current-fed transformer. They consist of a core with an applied low-impedance, closed secondary winding. The conductor on which the current is being measured is guided through the opening of the core. This conductor forms the primary winding of the transformer. The secondary winding is closed with a low-impedance load. The current that flows in the secondary winding is proportional to the primary current. Transformers are used together with suitable evaluation units to make precise, electrically isolated energy measurements (e.g. for billing purposes).	The operating principles of the residual current transformer and the transformer are similar. The aim here, however, is not to detect a current during normal operations, but rather to recognize when a fault current is present. So the forward and return conductors both pass through the sensor. During "fault-free" operations, the magnetic fields of the forward and return conductors cancel each other (the same applies to a three-phase system). However, if an earthing fault, for example, occurs, then there will be differences between the forward and return conductors that result in a magnetic field. This magnetic field and the resulting fault current are detected using the transformer and evaluated. Errors can then be detected and rectified before the entire facility needs to be shut down.

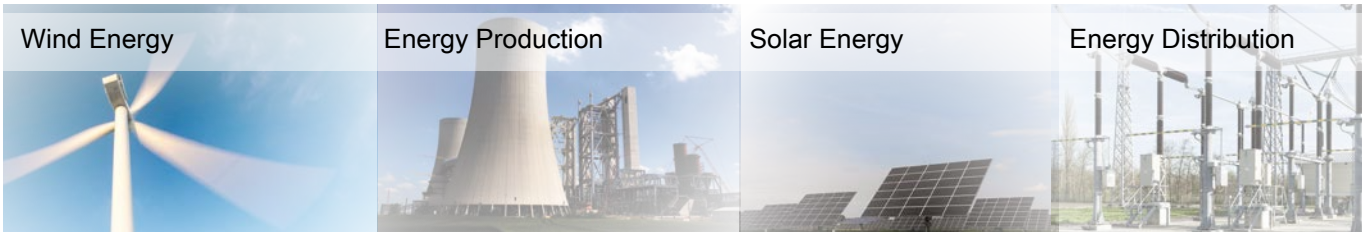

Measurement principles

Hall Effect Current Sensors

Measurement of DC, AC and mixed currents in the power electronics

Open-Loop Current Sensors	Closed-Loop Current Sensors
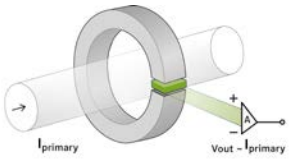	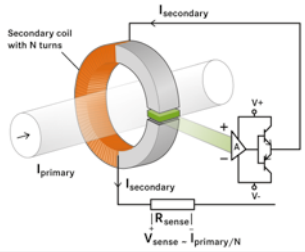
Accuracy ≈1 % of I_{PN} @ +25 °C	Accuracy ≈1 % of I_{PN} @ +25 °C
Accuracy ≈5 % of I_{PN} @ -40 °C … 85 °C	Accuracy ≈1 % of I_{PN} @ -40 °C … 85 °C
Linearity <0.5 %	Linearity <0.1 %
Response time ≈3 µs	Response time ≈1 µs
Frequency range 0 … 25 kHz	Frequency range 0…100 kHz
Supply voltage ±15 V	Supply voltage ±15 V … 24 V
Output signal 4 V @ I_{PN}	Output signal 100 mA @ I_{PN} (typical)
For open-loop sensors, the primary current's magnetic field is concentrated in a magnetically soft toroid. A hall element that generates a voltage proportional to the magnetic field or to the current is positioned in the toroid's air gap. The hall voltage is amplified and delivers a mapping of the primary current as an output signal. One advantage of these sensors is the simple design. However, the temperature dependency of the hall element and of the amplification influences the accuracy.	Closed-loop current sensors have a design similar to that of open-loop current sensors. The hall voltage, however is not used directly as measurement signal but it is used to regulate a secondary current. The secondary current flows through a coil with N windings and generates a magnetic compensation field in the toroid. If the secondary current is multiplied by (x N) and is exactly as high as the primary current, the two magnetic fields cancel each other in the toroid. The hall element always regulates the magnetic flux to zero. The secondary current is simultaneously the sensor's output signal ($I_s = \frac{I_p}{N}$). In comparison to open-loop current sensors the closed-loop current sensors consume more power, but work very precisely throughout the entire temperature range (T_A = -40 °C … 85 °C, accuracy ≤1 %).

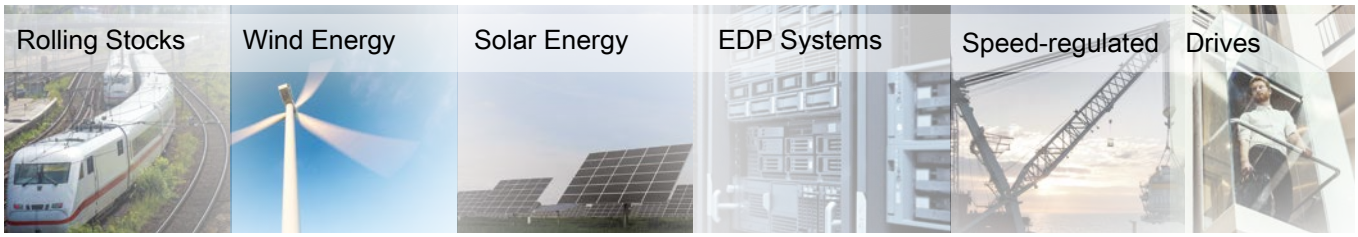

Features

- Measurable currents: AC, DC, pulsed, mixed, etc.
- Hall effect compensated current sensor
- High accuracy over the entire measuring range
- Galvanic insulation between primary and secondary circuit.
- Panel mounting
- Enclosure material and potting mass have a flammability rating according to UL 94 V 0
- Applications: frequency converters, electrical drives, switched mode power supplies, UPS

Technical characteristics

I_{PN}	Nominal primary current	200	A
I_{PM}	Primary current, measuring range	0 ... ±300	A
R_M	Burden resistance		

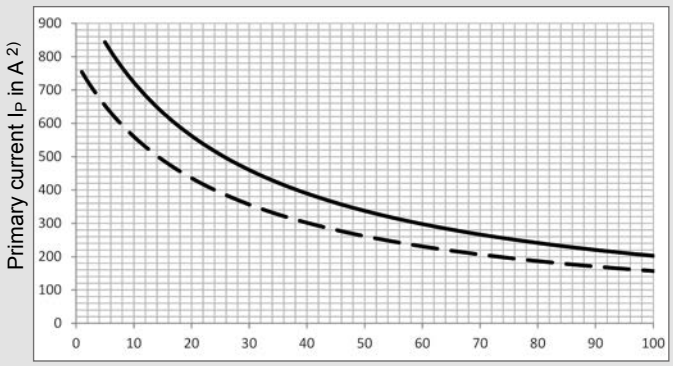

Burden resistance R_M in Ω

I_{SN}	Nominal secondary current	100	mA
K_N	Turns ratio	1 : 2000	
V_C	Power supply (±5 %)	±12 ... 15	V
I_C	Current consumption @ V_C = 15 V	19 + I_S	mA
X	Overall accuracy @ I_{PN}, T_A = +25 °C	±0.8	%
E_L	Linearity	<0.1	%
I_O	Offset current @ I_P = 0, T_A = +25 °C	max ±0.3	mA
I_{OT}	Temperature drift of I_O -40 °C ... +85 °C	max ±0.8	mA
t_r	Response time of I_{PN}	<1	µs
di/dt	di/dt @optimal magnetic coupling	>100	A/µs
f	Frequency range	DC ... 100	kHz
T_A	Ambient temperature range	-40 ... +85	°C
T_S	Storage temperature range	-45 ... +90	°C
m	Weight	≈0.15	kg
R_S	Coil resistance @ T_A = +85 °C	25	Ω
V_D	Test voltage, effective, 50 Hz, 1 min.	3	kV
V_{st}	Rated impulse voltage 1.2/50 µs	10	kV
V_B	Rated voltage[1]	0.6	kV
	Standards	EN 50 178 EN 61 373	
Approvals / Marking		CE RoHS GL c UL us	

[1] Safe separation (overvoltage category III, pollution degree 2)
[2] Primary currents higher than I_{PM} only for peak

HARTING Hall Effect Current Sensor HCM 200 A

I_{PN} = 200 A

Identification	Part number	Drawing	Dimensions in mm
HCM 200 A Connection: Metz Type 320 (PT11503VBBN) mating connector included (Metz SP04503VBNC)	20 31 020 0102	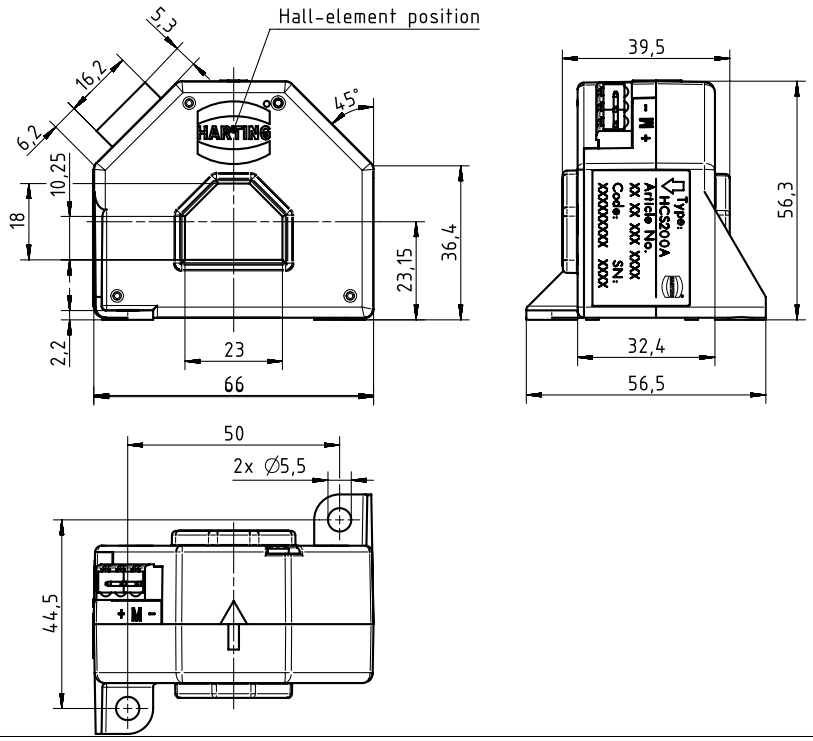	
HCM 200 A Faston Connection: 3 x Faston 6.3 x 0.8 mm	20 31 020 0101	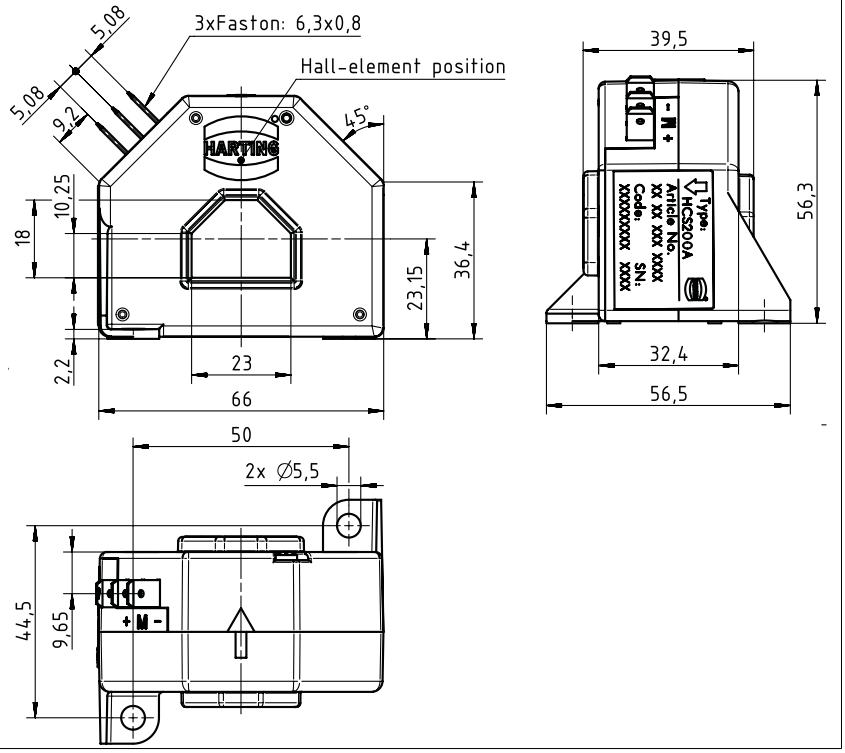	

Features

- Measurable currents: AC, DC, pulsed, mixed, etc.
- Hall effect compensated current sensor
- High accuracy over the entire measuring range
- Galvanic insulation between primary and secondary circuit.
- Panel mounting
- Enclosure material and potting mass have a flammability rating according to UL 94 V 0
- Applications: frequency converters, electrical drives, switched mode power supplies, UPS

Technical characteristics

I_{PN}	Nominal primary current	200	A
I_{PM}	Primary current, measuring range	0 ... ±420	A
R_M	Burden resistance		

— V_C = ±15 V -5 %, T_A = 85 °C - - V_C = ±12 V -5 %, T_A = 85 °C

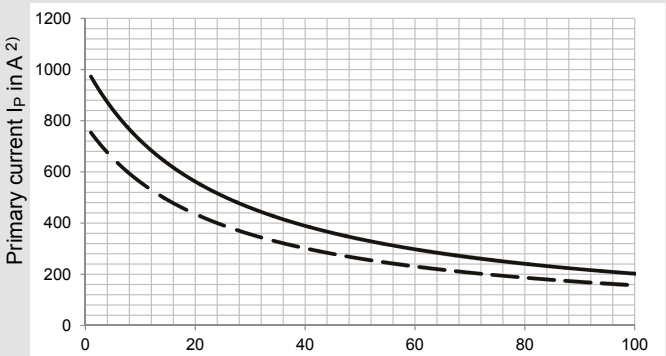

Burden resistance R_M in Ω

I_{SN}	Nominal secondary current	100	mA
K_N	Turns ratio	1 : 2000	
V_C	Power supply (±5 %)	±12 ... 15	V
I_C	Current consumption @ V_C = 15 V	17 + I_S	mA
X	Overall accuracy @ I_{PN}, T_A = +25 °C	±0.5	%
E_L	Linearity	<0.1	%
I_O	Offset current @ I_P = 0, T_A = +25 °C	max ±0.2	mA
I_{OT}	Temperature drift of I_O -40 °C ... +85 °C	max ±0.4	mA
t_r	Response time of I_{PN}	<1	µs
di/dt	di/dt @optimal magnetic coupling	>100	A/µs
f	Frequency range	DC ... 100	kHz
T_A	Ambient temperature range	-40 ... +85	°C
T_S	Storage temperature range	-45 ... +90	°C
m	Weight	≈80	g
R_S	Coil resistance @ T_A = +85 °C	29	Ω
V_D	Test voltage, effective, 50 Hz, 1 min.	3	kV
V_{st}	Rated impulse voltage 1.2/50 µs	10	kV
V_B	Rated voltage[1)]	0.6	kV
	Standards	EN 50 178 EN 61 373	
Approvals / Marking		CE RoHS GL	

[1)] Safe separation (overvoltage category III, pollution degree 2)
[2)] Primary currents higher than I_{PM} only for peak

HARTING Hall Effect Current Sensor HCM 200 A Small

I_{PN} = 200 A

Identification	Part number	Drawing	Dimensions in mm
HCM 200 A small Connection: HARTING *har*-flexicon 3.81 MTV-3 TB 100 BK mating connector included (HARTING *har*-flexicon 3.81FPH-3B200BK)	20 31 020 0301	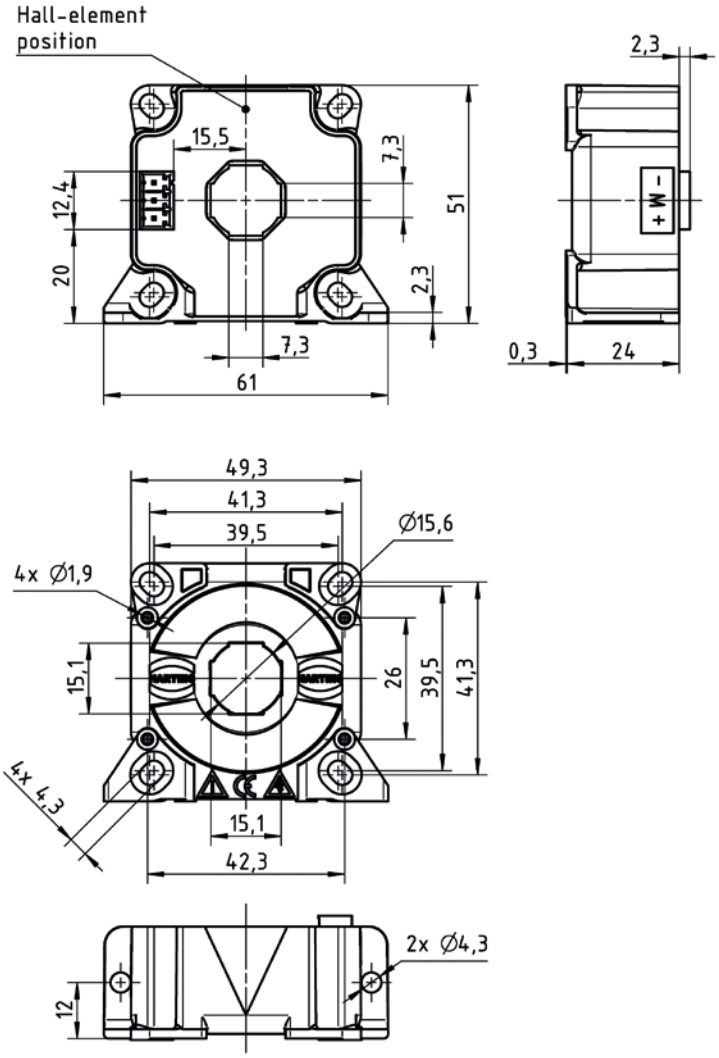	

Features

- Measurable currents: AC, DC, pulsed, mixed, etc.
- Hall effect compensated current sensor
- High accuracy over the entire measuring range
- Galvanic insulation between primary and secondary circuit.
- Panel mounting
- Enclosure material and potting mass have a flammability rating according to UL 94 V 0
- Applications: frequency converters, electrical drives, switched mode power supplies, UPS

Technical characteristics

I_{PN}	Nominal primary current	300	A
I_{PM}	Primary current, measuring range	0 ... ±500	A
R_M	Burden resistance		

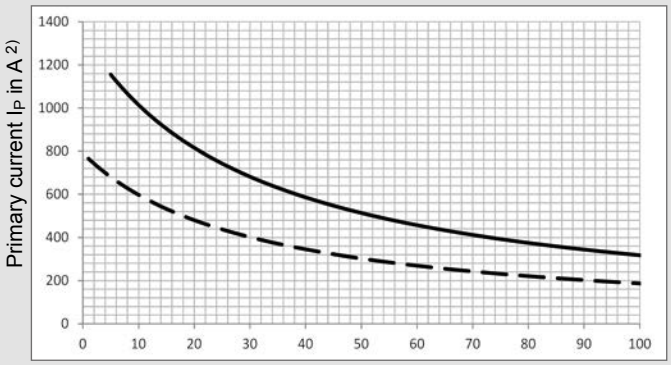

I_{SN}	Nominal secondary current	150	mA
K_N	Turns ratio	1 : 2000	
V_C	Power supply (±5 %)	±15 ... 24	V
I_C	Current consumption @ V_C = 15 V	20 + I_S	mA
X	Overall accuracy @ I_{PN}, T_A = +25 °C	±0.5	%
E_L	Linearity	<0.1	%
I_O	Offset current @ I_P = 0, T_A = +25 °C	max ±0.3	mA
I_{OT}	Temperature drift of I_O -40 °C ... +85 °C	max ±0.7	mA
t_r	Response time of I_{PN}	<1	µs
di/dt	di/dt @optimal magnetic coupling	>100	A/µs
f	Frequency range	DC ... 100	kHz
T_A	Ambient temperature range	-40 ... +85	°C
T_S	Storage temperature range	-45 ... +90	°C
m	Weight	≈0.25	kg
R_S	Coil resistance @ T_A = +85 °C	31	Ω
V_D	Test voltage, effective, 50 Hz, 1 min.	3	kV
V_{st}	Rated impulse voltage 1.2/50 µs	10	kV
V_B	Rated voltage[1)]	0.6	kV
	Standards	EN 50 178 EN 61 373	
Approvals / Marking		CE RoHS GL c UL us	

[1)] Safe separation (overvoltage category III, pollution degree 2)
[2)] Primary currents higher than I_{PM} only for peak

HARTING Hall Effect Current Sensor HCM 300 A

I_{PN} = 300 A

Identification	Part number	Drawing	Dimensions in mm
HCM 300 A Connection: Metz Type 320 PT11503VBBN) mating connector included (Metz SP04503VBNC)	20 31 030 0101		

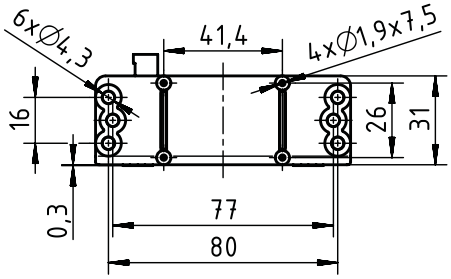

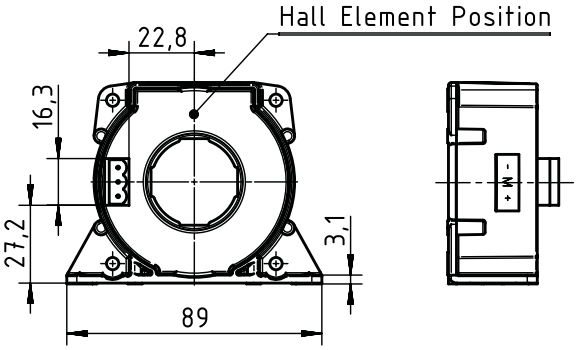

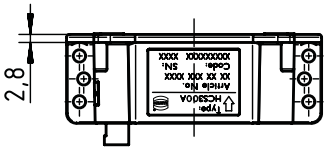

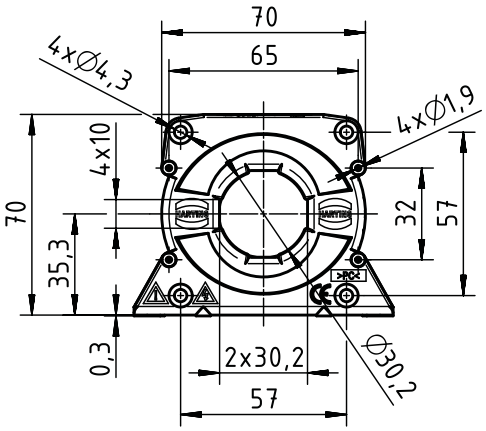

Features

- Measurable currents: AC, DC, pulsed, mixed, etc.
- Hall effect compensated current sensor
- High accuracy over the entire measuring range
- Galvanic insulation between primary and secondary circuit.
- Panel mounting
- Enclosure material and potting mass have a flammability rating according to UL 94 V 0
- Applications: frequency converters, electrical drives, switched mode power supplies, UPS

Technical characteristics

I_{PN}	Nominal primary current	300	A
I_{PM}	Primary current, measuring range	0 ... ±500	A
R_M	Burden resistance		

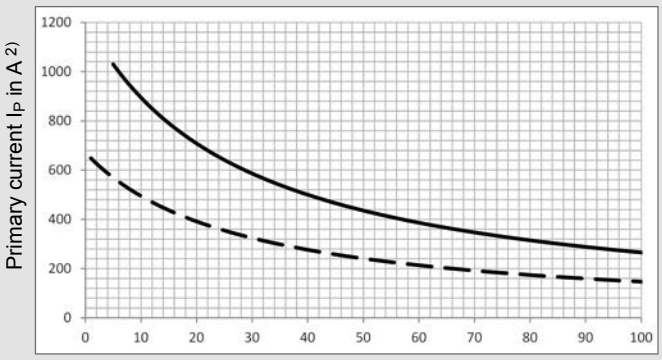

I_{SN}	Nominal secondary current	150	mA
K_N	Turns ratio	1 : 2000	
V_C	Power supply (±5 %)	±12 ... 20	V
I_C	Current consumption @ V_C = 15 V	26 + I_S	mA
X	Overall accuracy @ I_{PN}, T_A = +25 °C	±0.5	%
E_L	Linearity	<0.1	%
I_O	Offset current @ I_P = 0, T_A = +25 °C	max ±0.2	mA
I_{OT}	Temperature drift of I_O -40 °C ... +85 °C	max ±0.7	mA
t_r	Response time of I_{PN}	<1	µs
di/dt	di/dt @optimal magnetic coupling	>100	A/µs
f	Frequency range	DC ... 100	kHz
T_A	Ambient temperature range	-40 ... +85	°C
T_S	Storage temperature range	-45 ... +90	°C
m	Weight	≈100	g
R_S	Coil resistance @ T_A = +85 °C	28	Ω
V_D	Test voltage, effective, 50 Hz, 1 min.	3	kV
V_{st}	Rated impulse voltage 1.2/50 µs	10	kV
V_B	Rated voltage 1)	0.6	kV
	Standards	EN 50 178 EN 61 373	
Approvals / Marking		CE RoHS GL c UL us	

1) Safe separation (overvoltage category III, pollution degree 2)
2) Primary currents higher than I_{PM} only for peak

HARTING Hall Effect Current Sensor HCM 300 A Small

I_{PN} = 300 A

Identification	Part number	Drawing	Dimensions in mm
HCM 300 A small Connection: HARTING *har*-flexicon 3.81 MTV-3 TB 100 BK mating connector included (HARTING *har*-flexicon 3.81FPH-3B200BK)	20 31 030 0301	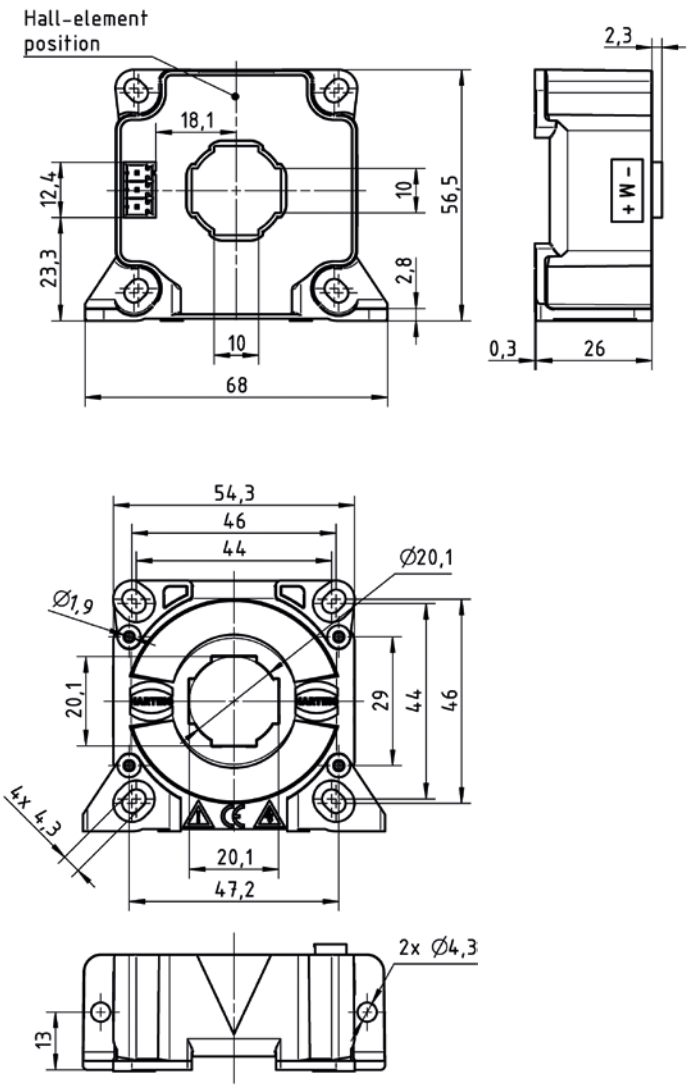	

Features

- Measurable currents: AC, DC, pulsed, mixed, etc.
- Hall effect compensated current sensor
- High accuracy over the entire measuring range
- Galvanic insulation between primary and secondary circuit.
- Panel mounting
- Enclosure material and potting mass have a flammability rating according to UL 94 V 0
- Applications: frequency converters, electrical drives, switched mode power supplies, UPS

I_{PN}	Nominal primary current	500	A
I_{PM}	Primary current, measuring range	0 ... ±800	A
R_M	Burden resistance		

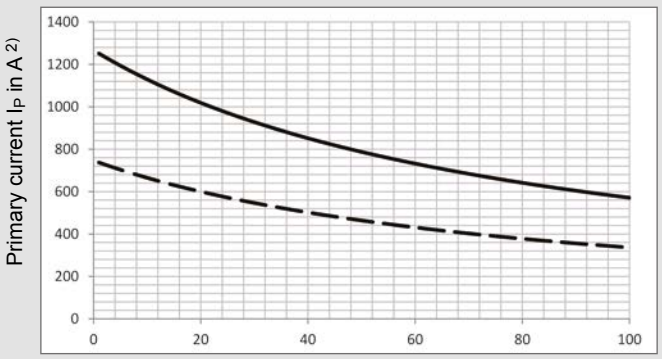

I_{SN}	Nominal secondary current	100	mA
K_N	Turns ratio	1 : 5000	
V_C	Power supply (±5 %)	±15 ... 24	V
I_C	Current consumption @ V_C = 15 V	20 + I_S	mA
X	Overall accuracy @ I_{PN}, T_A = +25 °C	±0.6	%
E_L	Linearity	<0.1	%
I_O	Offset current @ I_P = 0, T_A = +25 °C	max ±0.4	mA
I_{OT}	Temperature drift of I_O -40 °C ... +85 °C	max ±0.7	mA
t_r	Response time of I_{PN}	<1	µs
di/dt	di/dt @optimal magnetic coupling	>100	A/µs
f	Frequency range	DC ... 100	kHz
T_A	Ambient temperature range	-40 ... +85	°C
T_S	Storage temperature range	-45 ... +90	°C
m	Weight	≈0.25	kg
R_S	Coil resistance @ T_A = +85 °C	82	Ω
V_D	Test voltage, effective, 50 Hz, 1 min.	3	kV
V_{st}	Rated impulse voltage 1.2/50 µs	10	kV
V_B	Rated voltage 1)	0.6	kV
	Standards	EN 50 178 EN 61 373	
Approvals / Marking		CE RoHS GL c UL us	

1) Safe separation (overvoltage category III, pollution degree 2)
2) Primary currents higher than I_{PM} only for peak

HARTING Hall Effect Current Sensor HCM 500 A

I_{PN} = 500 A

Identification	Part number	Drawing	Dimensions in mm
HCM 500 A Connection: Metz Type 320 (PT11503VBBN) mating connector included (Metz SP04503VBNC)	20 31 050 0101		

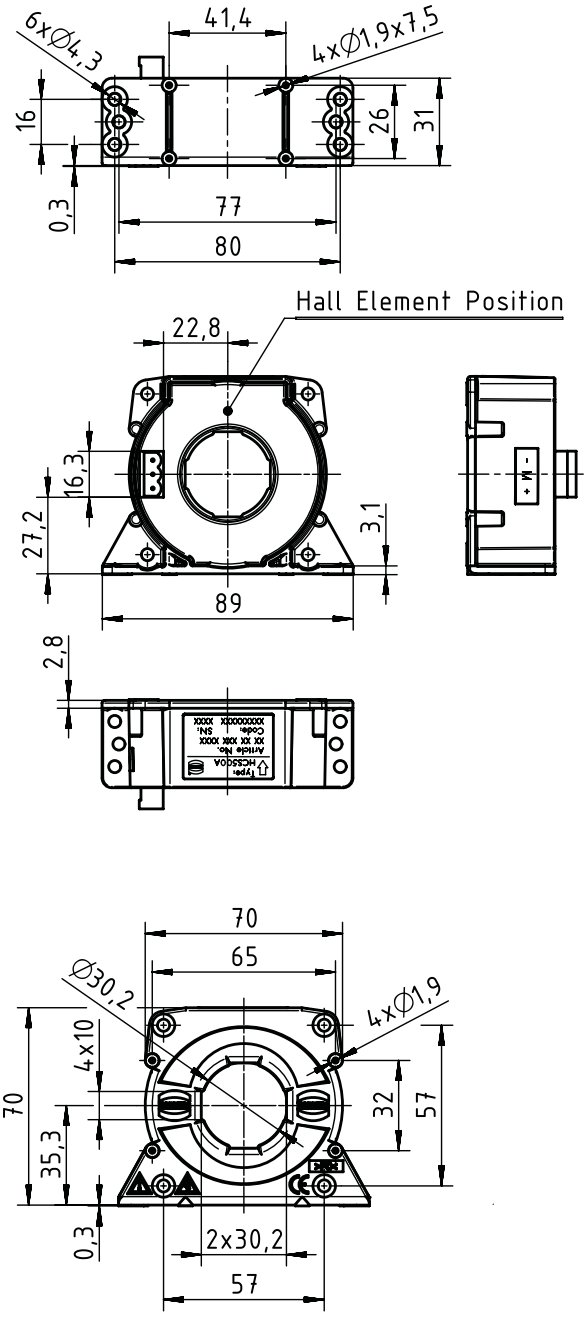

Features

- Measurable currents: AC, DC, pulsed, mixed, etc.
- Hall effect compensated current sensor
- High accuracy over the entire measuring range
- Galvanic insulation between primary and secondary circuit.
- Panel mounting
- Enclosure material and potting mass have a flammability rating according to UL 94 V 0
- Applications: frequency converters, electrical drives, switched mode power supplies, UPS

Technical characteristics

I_{PN}	Nominal primary current	1000	A
I_{PM}	Primary current, measuring range	0 ... ±1500	A
R_M	Burden resistance		

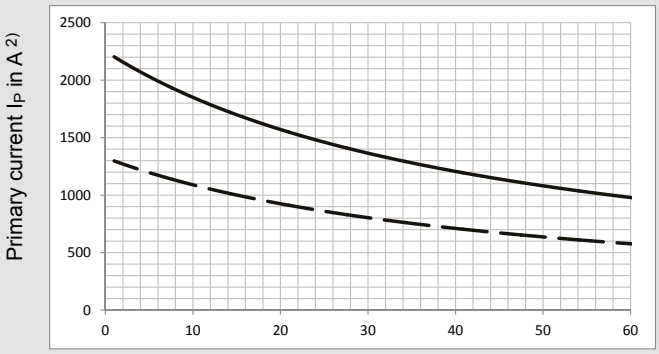

I_{SN}	Nominal secondary current	200	mA
K_N	Turns ratio	1 : 5000	
V_C	Power supply (±5 %)	±15 ... 24	V
I_C	Current consumption @ V_C = 15 V	21 + I_S	mA
X	Overall accuracy @ I_{PN}, T_A = +25 °C	±0.4	%
E_L	Linearity	<0.1	%
I_O	Offset current @ I_P = 0, T_A = +25 °C	max ±0.4	mA
I_{OT}	Temperature drift of I_O -40 °C ... +85 °C	max ±0.1	mA
t_r	Response time of I_{PN}	<1	µs
di/dt	di/dt @optimal magnetic coupling	>100	A/µs
f	Frequency range (-1 dB)	DC ...100	kHz
T_A	Ambient temperature range	-40 ... +85	°C
T_S	Storage temperature range	-45 ... +90	°C
m	Weight	≈0.5	kg
R_S	Coil resistance @ T_A = +85 °C	46	Ω
V_D	Test voltage, effective, 50 Hz, 1 min.	3	kV
V_{st}	Rated impulse voltage 1.2/50 µs	12	kV
V_B	Rated voltage[1]	0.9	kV
	Standards	EN 50 178 EN 61 373	
Approvals / Marking		CE RoHS GL c UL us	

[1] Safe separation (overvoltage category III, pollution degree 2)
[2] Primary currents higher than I_{PM} only for peak

HARTING Hall Effect Current Sensor HCM 1000 A

I_{PN} = 1000 A

Identification	Part number	Drawing	Dimensions in mm
HCM 1000 A Connection: Metz Type 320 (PT11503VBBN) mating connector included (Metz SP04503VBNC)	20 31 100 0101	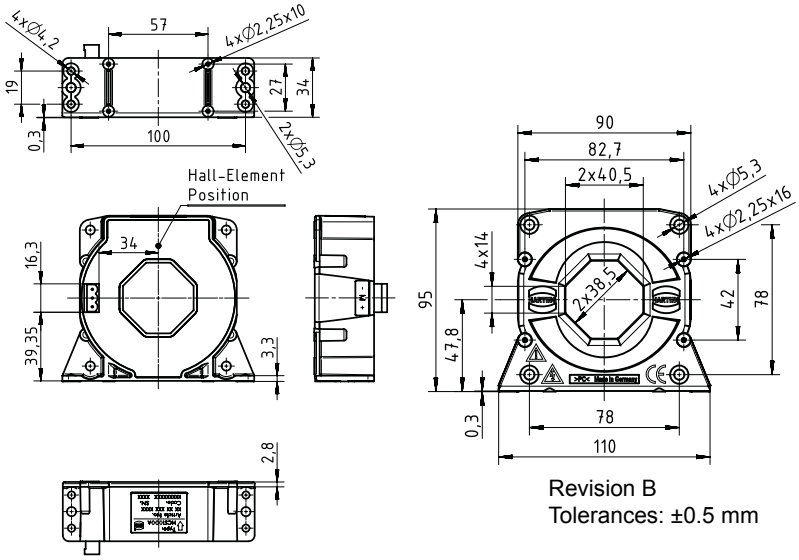 Revision B Tolerances: ±0.5 mm	
HCM 1000 A JST Connection: JST B 3P-VH	20 31 100 0102	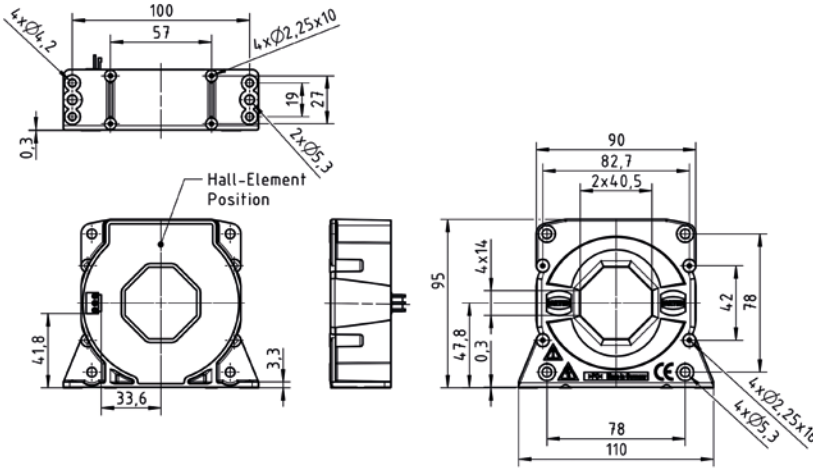	
HCM 1000 A with bolts with internal screen between primary and secondary circuit	20 31 100 9106	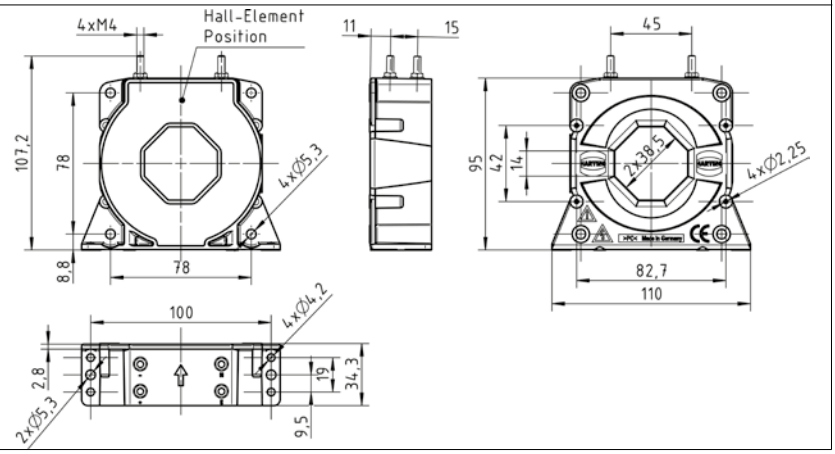	

Features

- Measurable currents: AC, DC, pulsed, mixed, etc.
- Hall effect compensated current sensor
- High accuracy over the entire measuring range
- Galvanic insulation between primary and secondary circuit.
- Panel mounting
- Enclosure material and potting mass have a flammability rating according to UL 94 V 0
- Applications: frequency converters, electrical drives, switched mode power supplies, UPS

Technical characteristics

I_{PN}	Nominal primary current	2000	A
I_{PM}	Primary current, measuring range	0 ... ±3000	A
R_M	Burden resistance		

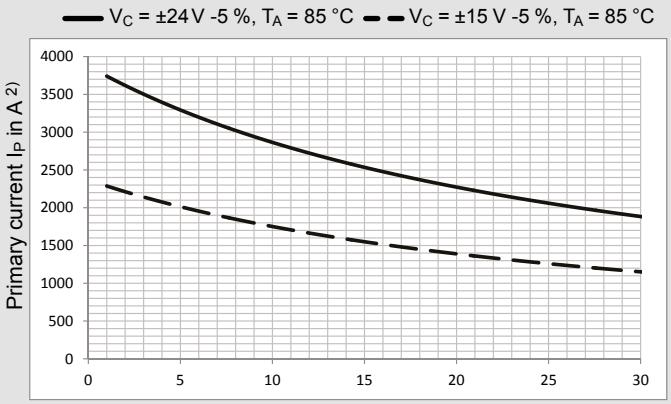

I_{SN}	Nominal secondary current	400	mA
K_N	Turns ratio	1 : 5000	
V_C	Power supply (±5 %)	±15 ... 24	V
I_C	Current consumption @ V_C = 15 V	20 + I_S	mA
X	Overall accuracy @ I_{PN}, T_A = +25 °C	±0.3	%
E_L	Linearity	<0.1	%
I_O	Offset current @ I_P = 0, T_A = +25 °C	max ±0.5	mA
I_{OT}	Temperature drift of I_O -40 °C ... +85 °C	max ±1.2	mA
t_r	Response time of I_{PN}	<1	µs
di/dt	di/dt @optimal magnetic coupling	>100	A/µs
f	Frequency range (-1 dB)	DC ... 100	kHz
T_A	Ambient temperature range	-40 ... +85	°C
T_S	Storage temperature range	-45 ... +90	°C
m	Weight	≈1.5	kg
R_S	Coil resistance @ T_A = +85 °C	28	Ω
V_D	Test voltage, effective, 50 Hz, 1 min.	4	kV
V_{st}	Rated impulse voltage 1.2/50 µs	15	kV
V_B	Rated voltage[1)]	1.5	kV
	Standards	EN 50 178 EN 61 373	
Approvals / Marking		CE RoHS GL c UL us	

[1)] Safe separation (overvoltage category III, pollution degree 2)
[2)] Primary currents higher than I_{PM} only for peak

HARTING Hall Effect Current Sensor HCM 2000 A

I_{PN} = 2000 A

Identification	Part number	Drawing	Dimensions in mm
HCM 2000 A Connection: Metz Type 320 (PT11503VBBN) mating connector included (Metz SP04503VBNC)	20 31 200 0101	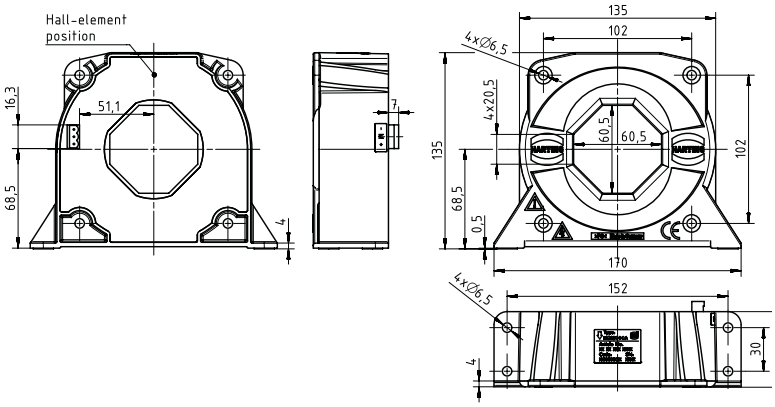	

Features

- Measurable currents: AC, DC, pulsed, mixed, etc.
- Hall effect compensated current sensor
- High accuracy over the entire measuring range
- Galvanic insulation between primary and secondary circuit.
- Panel mounting
- Enclosure material and potting mass have a flammability rating according to UL 94 V 0
- Applications: frequency converters, electrical drives, switched mode power supplies, UPS

Technical characteristics

I_{PN}	Nominal primary current	2000	A
I_{PM}	Primary current, measuring range	0 ... ±3000	A
R_M	Burden resistance		

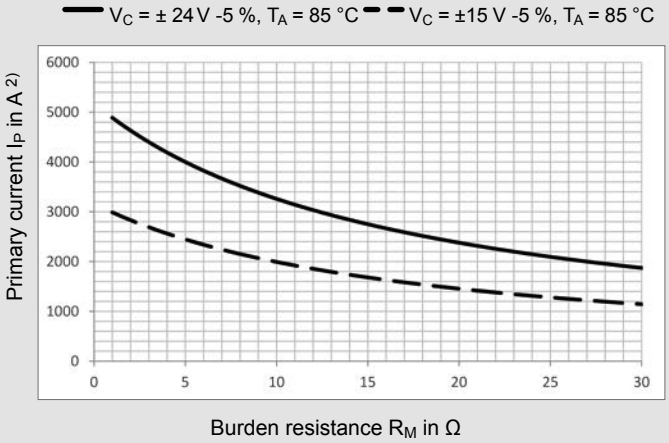

I_{SN}	Nominal secondary current	500	mA
K_N	Turns ratio	1 : 4000	
V_C	Power supply (±5 %)	±15 ... 24	V
I_C	Current consumption @ V_C = 15 V	20 + I_S	mA
X	Overall accuracy @ I_{PN}, T_A = +25 °C	±0.3	%
E_L	Linearity	<0.1	%
I_O	Offset current @ I_P = 0, T_A = +25 °C	max ±0.5	mA
I_{OT}	Temperature drift of I_O -40 °C ... +85 °C	max ±1.2	mA
t_r	Response time of I_{PN}	<1	µs
di/dt	di/dt @optimal magnetic coupling	>100	A/µs
f	Frequency range (-1 dB)	DC ... 100	kHz
T_A	Ambient temperature range	-40 ... +85	°C
T_S	Storage temperature range	-45 ... +90	°C
m	Weight	≈1.5	kg
R_S	Coil resistance @ T_A = +85 °C	17	Ω
V_D	Test voltage, effective, 50 Hz, 1 min.	4	kV
V_{st}	Rated impulse voltage 1.2/50 µs	15	kV
V_B	Rated voltage[1)]	1.5	kV
	Standards	EN 50 178 EN 61 373	
Approvals / Marking		CE RoHS GL c UL us	

[1)] Safe separation (overvoltage category III, pollution degree 2)
[2)] Primary currents higher than I_{PM} only for peak

HARTING Hall Effect Current Sensor HCM 2000 A 1:4000

I_{PN} = 2000 A

Identification	Part number	Drawing	Dimensions in mm
HCM 2000 A 1.4000 Connection: Lockable connector, 3 pins, 3.81 mm (Metz PT09403HBBT) mating connector included (Metz SP06403VGNF)	20 31 200 0103	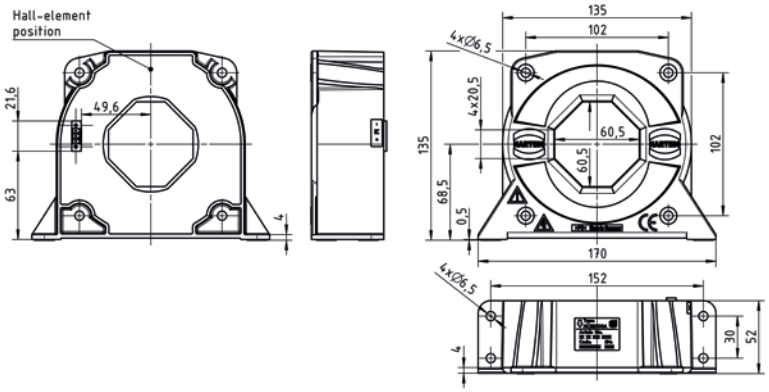	

Features

- Measurable currents: AC, DC, pulsed, mixed, etc.
- Hall effect compensated current sensor
- High accuracy over the entire measuring range
- Galvanic insulation between primary and secondary circuit.
- Internal screen between primary and secondary circuit.
- Panel mounting
- Enclosure material and potting mass have a flammability rating according to UL 94 V 0
- Applications: frequency converters, electrical drives, auxiliary converters

[1] Safe separation (overvoltage category III, pollution degree 2)
[2] Primary currents higher than I_{PM} only for peak

Technical characteristics

I_{PN}	Nominal primary current	500	A
I_{PM}	Primary current, measuring range	0 ... ±1200	A
R_M	Burden resistance		

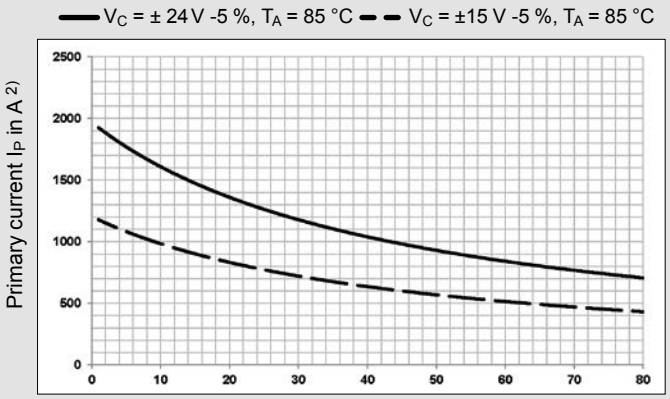

I_{SN}	Nominal secondary current	125	mA
K_N	Turns ratio	1 : 4000	
V_C	Power supply (±5 %)	±15 ... 24	V
I_C	Current consumption @ V_C = 15 V	20 + I_S	mA
X	Overall accuracy @ I_{PN}, T_A = +25 °C	±0.6	%
E_L	Linearity	<0.1	%
I_O	Offset current @ I_P = 0, T_A = +25 °C	max ±0.5	mA
I_{OT}	Temperature drift of I_O -40 °C ... +85 °C	max ±0.8	mA
t_r	Response time of I_{PN}	<1	µs
di/dt	di/dt @optimal magnetic coupling	>100	A/µs
f	Frequency range (-1 dB)	DC ... 100	kHz
T_A	Ambient temperature range	-40 ... +85	°C
T_S	Storage temperature range	-45 ... +90	°C
m	Weight	≈0.4	kg
R_S	Coil resistance @ T_A = +85 °C	45	Ω
V_D	Test voltage, effective, 50 Hz, 1 min.		
	- primary – secondary / screen	7	kV
	- secondary – screen	0.5	kV
V_{st}	Rated impulse voltage 1.2/50 µs	20	kV
V_B	Rated voltage[1]	2	kV
	Standards	EN 50 155 EN 61 373	
Approvals / Marking		CE RoHS GL c UL us	

HARTING Hall Effect Current Sensor HCMR 500 A

I_{PN} = 500 A

Identification	Part number	Drawing	Dimensions in mm
HCMR 500 A Connection: 4 x screw termination with Faston 6.3 mm x 0.8 mm, 4 x hexagonal nuts included	20 31 050 9101	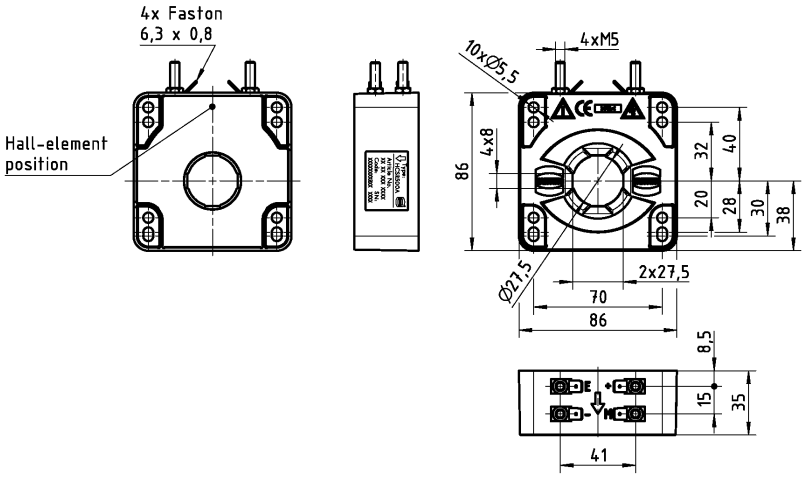	
HCMR 500 A with feet Connection: 4 x screw termination with Faston 6.3 mm x 0.8 mm, 4 x hexagonal nuts included	20 31 050 8101	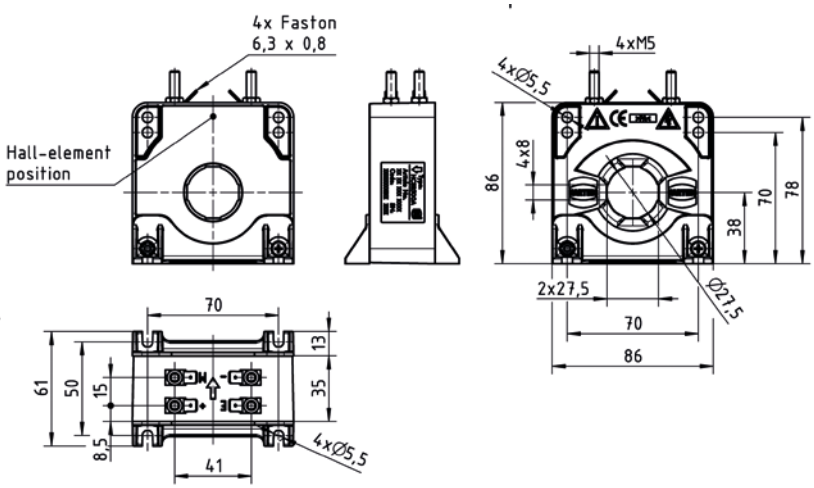	
HCMR 500 A M12 with feet Connection: M12, A-coded, 5 pins	20 31 050 8102	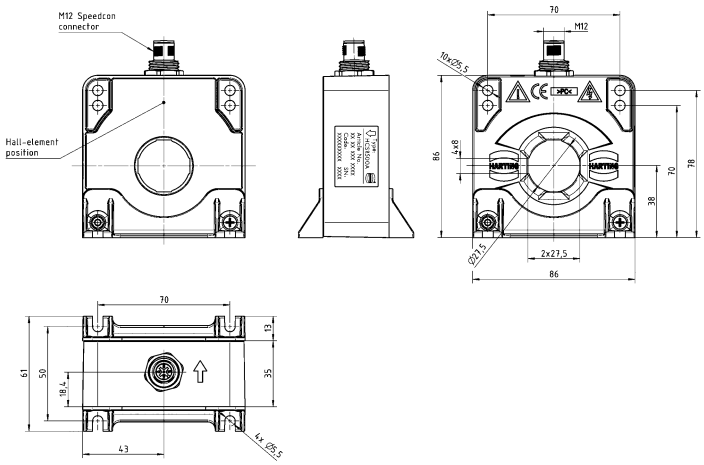	

Features

- Measurable currents: AC, DC, pulsed, mixed, etc.
- Hall effect compensated current sensor
- High accuracy over the entire measuring range
- Galvanic insulation between primary and secondary circuit.
- Internal screen between primary and secondary circuit.
- Panel mounting
- Enclosure material and potting mass have a flammability rating according to UL 94 V 0
- Applications: frequency converters, electrical drives, auxiliary converters

[1] Safe separation (overvoltage category III, pollution degree 2)
[2] Primary currents higher than I_{PM} only for peak

Technical characteristics

I_{PN}	Nominal primary current	1000	A
I_{PM}	Primary current, measuring range	0 ... ±2400	A
R_M	Burden resistance		

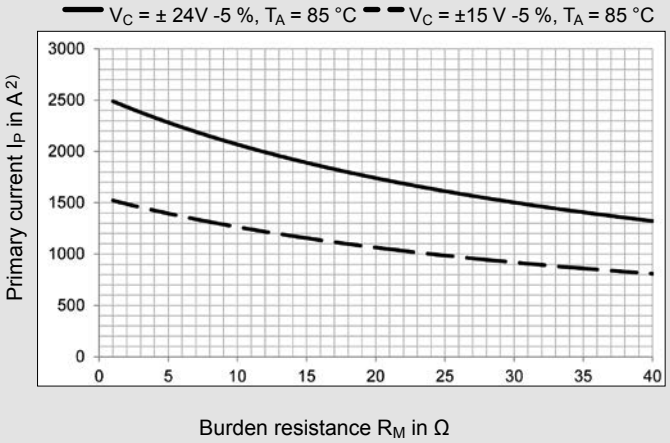

I_{SN}	Nominal secondary current	200	mA
K_N	Turns ratio	1 : 5000	
V_C	Power supply (±5 %)	±15 ... 24	V
I_C	Current consumption @ V_C = 15 V	20 + I_S	mA
X	Overall accuracy @ I_{PN}, T_A = +25 °C	±0.4	%
X	Overall accuracy @ I_{PN}, T_A = -40 ... +85 °C	±1	%
E_L	Linearity	<0.1	%
I_O	Offset current @ I_P = 0, T_A = +25 °C	max ±0.5	mA
I_{OT}	Temperature drift of I_O, -40 °C ... +85 °C	max ±0.8	mA
t_r	Response time of I_{PN}	<1	µs
di/dt	di/dt @optimal magnetic coupling	>100	A/µs
f	Frequency range (-1 dB)	DC ... 100	kHz
T_A	Ambient temperature range	-40 ... +85	°C
T_S	Storage temperature range	-45 ... +90	°C
m	Weight	≈0.7	kg
R_S	Coil resistance @ T_A = +85 °C	44	Ω
V_D	Test voltage, effective, 50 Hz, 1 min.		
	- primary – secondary / screen	12	kV
	- secondary – screen	1	kV
V_{st}	Rated impulse voltage 1.2/50 µs	20	kV
V_B	Rated voltage[1]	2	kV
	Standards	EN 50 155 EN 61 373	

Approvals / Marking

HARTING Hall Effect Current Sensor HCMR 1000 A with feet

I_{PN} = 1000 A

Identification	Part number	Drawing	Dimensions in mm
HCMR 1000 A with feet Connection: 4 x screw termination with Faston 6.3 mm x 0.8 mm, 4 x hexagonal nuts included	20 31 100 8101	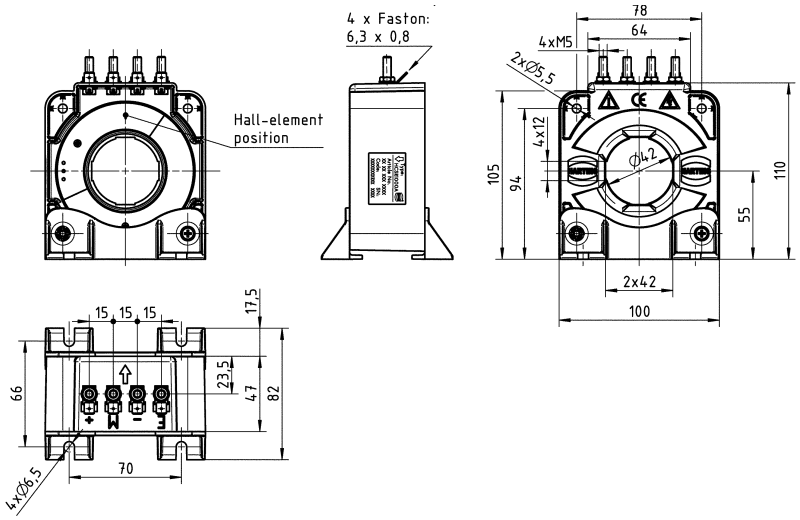	
HCMR 1000 A Connection: 4 x screw termination with Faston 6.3 mm x 0.8 mm, 4 x hexagonal nuts included	20 31 100 9101	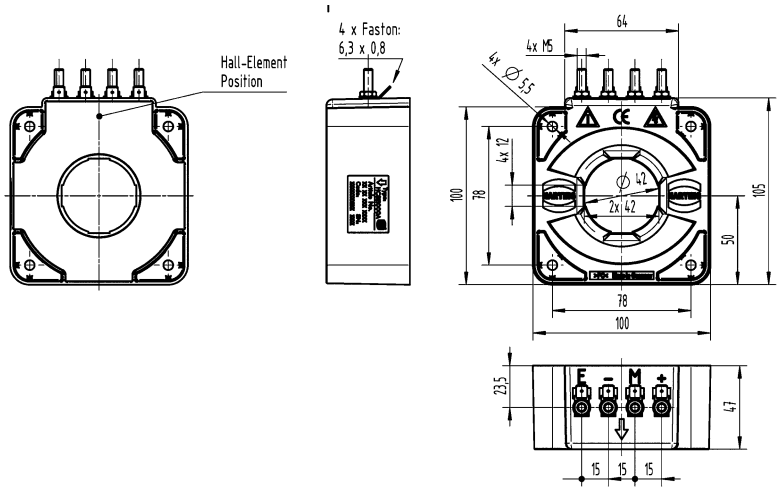	
HCMR 1000 A cable and 3 x HPR with feet Connection: HARTING 3 HPR with male Quintax insert	20 31 100 9103	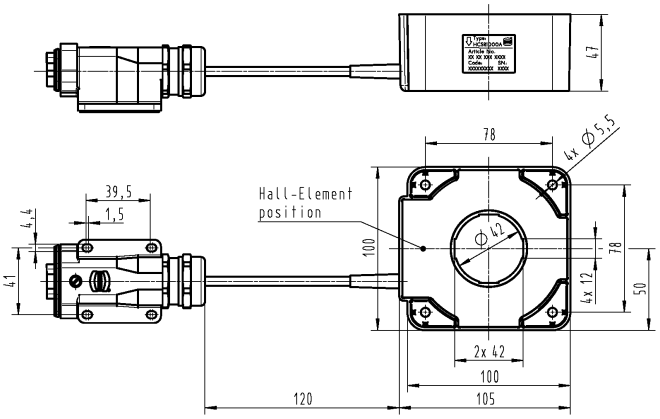	

HARTING Hall Effect Current Sensor HCMR 1000 A 1:4000

Features

- Measurable currents: AC, DC, pulsed, mixed, etc.
- Hall effect compensated current sensor
- High accuracy over the entire measuring range
- Galvanic insulation between primary and secondary circuit.
- Internal screen between primary and secondary circuit.
- Panel mounting
- Enclosure material and potting mass have a flammability rating according to UL 94 V 0
- Applications: frequency converters, electrical drives and auxiliary converters

[1] Safe separation (overvoltage category III, pollution degree 2)
[2] Primary currents higher than I_{PM} only for peak

Technical characteristics

I_{PN}	Nominal primary current	1000	A
I_{PM}	Primary current, measuring range	0 ... ±2400	A
R_M	Burden resistance		

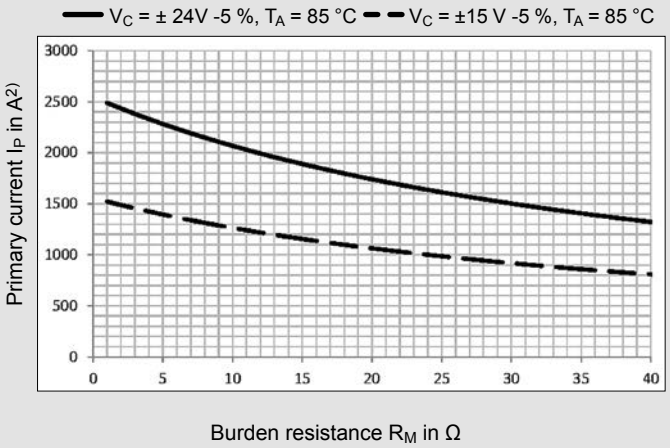

I_{SN}	Nominal secondary current	250	mA
K_N	Turns ratio	1 : 4000	
V_C	Power supply (±5 %)	±15 ... 24	V
I_C	Current consumption @ V_C = 15 V	30 + I_S	mA
X	Overall accuracy @ I_{PN}, T_A = +25 °C	±0.4	%
X	Overall accuracy @ I_{PN}, T_A = -40 °C ... +85 °C	±1	%
E_L	Linearity	<0.1	%
I_O	Offset current @ I_P = 0, T_A = +25 °C	max ±0.5	mA
I_{OT}	Temperature drift of I_O T = -40 °C ... +85 °C	max ±0.8	mA
t_r	Response time of I_{PN}	<1	µs
di/dt	di/dt @optimal magnetic coupling	>100	A/µs
f	Frequency range (-1 dB)	DC ... 100	kHz
T_A	Ambient temperature range	-40 ... +85	°C
T_S	Storage temperature range	-45 ... +90	°C
m	Weight	≈0.7	kg
R_S	Coil resistance @ T_A = +85 °C	33	Ω
V_D	Test voltage, effective, 50 Hz, 1 min.		
	- primary – secondary / screen	12	kV
	- secondary / screen	1	kV
V_{st}	Rated impulse voltage 1.2/50 µs	20	kV
V_B	Rated voltage[1]	2	kV
	Standards	EN 50 155 EN 61 373	
Approvals / Marking			

HARTING Hall Effect Current Sensor HCMR 1000 A 1:4000

I_{PN} = 1000 A

Identification	Part number	Drawing	Dimensions in mm
HCMR 1000 A 1:4000 Connection: 4 x hexagonal nuts included 4 x screw termination with Faston 6.3 mm x 0.8 mm	20 31 100 9107	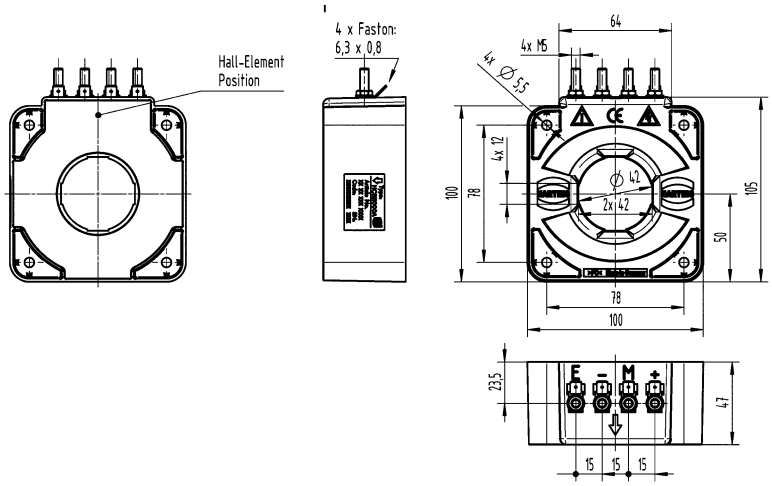	

Features

- Measurable currents: AC, DC, pulsed, mixed, etc.
- Hall effect compensated current sensor
- High accuracy over the entire measuring range
- Galvanic insulation between primary and secondary circuit.
- Panel mounting
- Internal screen between primary and secondary circuit.
- Enclosure material and potting mass have a flammability rating according to UL 94 V 0
- Applications: frequency converters, electrical drives and auxiliary converters

Technical characteristics

I_{PN}	Nominal primary current	2000	A
I_{PM}	Primary current, measuring range	0 ... ±3600	A
R_M	Burden resistance		

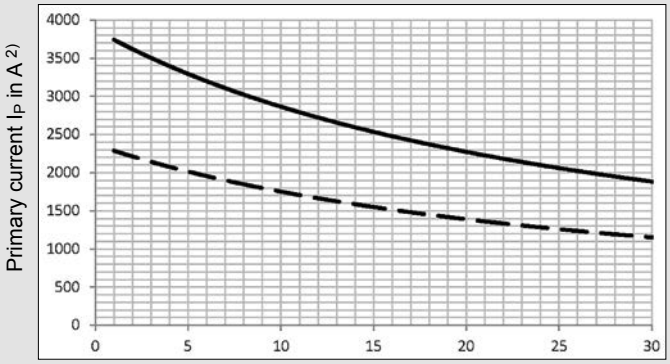

I_{SN}	Nominal secondary current	400	mA
K_N	Turns ratio	1 : 5000	
V_C	Power supply (±5 %)	±15 ... 24	V
I_C	Current consumption @ V_C = 15 V	20 + I_S	mA
X	Overall accuracy @ I_{PN}, T_A = +25 °C	±0.3	%
X	Overall accuracy @ I_{PN}, T_A = -40 °C ... +85 °C	±1	%
E_L	Linearity	<0.1	%
I_O	Offset current @ I_P = 0, T_A = +25 °C	max ±0.5	mA
I_{OT}	Temperature drift of I_O -40 °C ... +85 °C	max ±1	mA
t_r	Response time of I_{PN}	<1	µs
di/dt	di/dt @optimal magnetic coupling	>100	A/µs
f	Frequency range	DC ... 100	kHz
T_A	Ambient temperature range	-40 ... +85	°C
T_S	Storage temperature range	-45 ... +90	°C
m	Weight	≈1.5	kg
R_S	Coil resistance @ T_A = +85 °C	28	Ω
V_D	Test voltage, effective, 50 Hz, 1 min.		
	- primary – secondary / screen	12	kV
	- secondary / screen	1.5	kV
V_{st}	Rated impulse voltage 1.2/50 µs	20	kV
V_B	Rated voltage 1)	0.6	kV
	Standards	EN 50 155 EN 61 373	

Approvals / Marking

1) Safe separation (overvoltage category III, pollution degree 2)
2) Primary currents higher than I_{PM} only for peak

HARTING Hall Effect Current Sensor HCMR 2000 A

I_{PN} = 2000 A

Identification	Part number	Drawing	Dimensions in mm
HCMR 2000 A Connection: 4 x screw termination with Faston 6.3 mm x 0.8 mm, 4 x hexagonal nuts included	20 31 200 9101	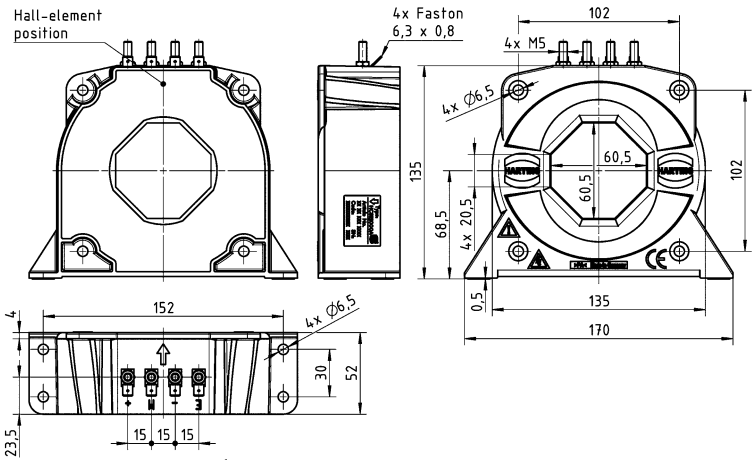	

HARTING Hall Effect Current Sensor HCMR 2000 A 1:4000

Features

- Measurable currents: AC, DC, pulsed, mixed, etc.
- Hall effect compensated current sensor
- High accuracy over the entire measuring range
- Galvanic insulation between primary and secondary circuit.
- Panel mounting
- Internal screen between primary and secondary circuit.
- Enclosure material and potting mass have a flammability rating according to UL 94 V 0
- Applications: frequency converters, electrical drives and auxiliary converters

[1] Safe separation (overvoltage category III, pollution degree 2)
[2] Primary currents higher than I_{PM} only for peak

Technical characteristics

I_{PN}	Nominal primary current	2000	A
I_{PM}	Primary current, measuring range	0 ... ±3600	A
R_M	Burden resistance		

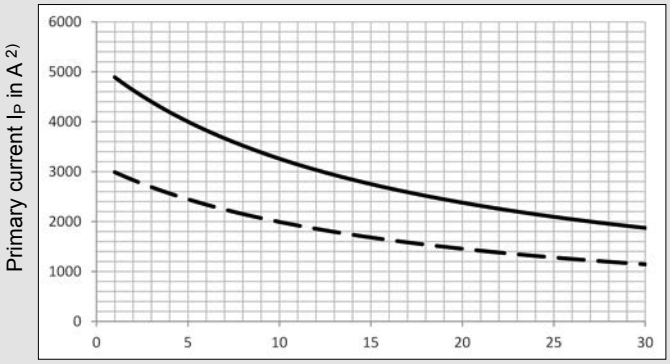

I_{SN}	Nominal secondary current	500	mA
K_N	Turns ratio	1 : 4000	
V_C	Power supply (±5 %)	±15 ... 24	V
I_C	Current consumption @ V_C = 15 V	20 + I_S	mA
X	Overall accuracy @ I_{PN}, T_A = +25 °C	±0.3	%
X	Overall accuracy @ I_{PN}, T_A = -40 °C ... +85 °C	±1	%
E_L	Linearity	<0.1	%
I_O	Offset current @ I_P = 0, T_A = +25 °C	max ±0.5	mA
I_{OT}	Temperature drift of I_O -40 °C ... +85 °C	max ±1	mA
t_r	Response time of I_{PN}	<1	µs
di/dt	di/dt @optimal magnetic coupling	>100	A/µs
f	Frequency range	DC ... 100	kHz
T_A	Ambient temperature range	-40 ... +85	°C
T_S	Storage temperature range	-45 ... +90	°C
m	Weight	≈1.5	kg
R_S	Coil resistance @ T_A = +85 °C	17	Ω
V_D	Test voltage, effective, 50 Hz, 1 min.		
	- primary – secondary / screen	12	kV
	- secondary / screen	1.5	kV
V_{st}	Rated impulse voltage 1.2/50 µs	20	kV
V_B	Rated voltage[1]	2	kV
	Standards	EN 50 155 EN 61 373	

Approvals / Marking

HARTING Hall Effect Current Sensor HCMR 2000 A 1:4000

I_{PN} = 2000 A

Identification	Part number	Drawing	Dimensions in mm
HCMR 2000 A 1:4000 Connection: M12, A-coded, 5 pins	20 31 200 9105	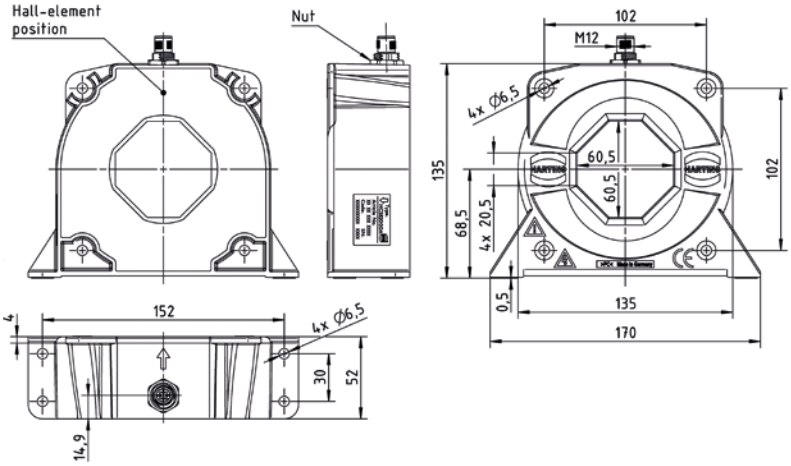	

Features

- Measurable currents: AC, DC, pulsed, mixed, etc.
- Open-Loop hall effect current sensors
- Galvanic insulation between primary and secondary circuit
- Panel mounting
- Enclosure material and potting mass have a flammability rating according to UL 94 V 0
- Applications: frequency converters, electrical drives and auxiliary converters

Technical characteristics

HCME 100			
I_{PN}	Nominal primary current	100	A
I_{PM}	Primary current, measuring range	0 ... ±300	A
HCME 300			
I_{PN}	Nominal primary current	300	A
I_{PM}	Primary current, measuring range	0 ... ±900	A
HCME 500			
I_{PN}	Nominal primary current	500	A
I_{PM}	Primary current, measuring range	0 ... ±1000	A
HCME 800			
I_{PN}	Nominal primary current	800	A
I_{PM}	Primary current, measuring range	0 ... ±1000	A
V_{out}	Output voltage at I_{PN}	4	V
R_L	Load resistance	>1	kΩ
V_C	Power supply (±5 %)	±15	V
I_C	Current consumption @ V_C = 15 V	< 25	mA
R_{IN}	Insulation resistance	> 500	MΩ
X	Overall accuracy without offset @ I_{PN}, T_A = +25 °C	±1	%
E_L	Linearity	<0.5	%
V_O	Offset voltage @ I_P = 0, T = 25 °C	±10	mV
V_{OOL}	Offset after I_{Pmax}	±10	mV
V_{OT}	Thermal offset drift, T = -25°C … +85°C	±1	mV/K
V_{outT}	Thermal gain drift, T = -25 °C … +85 °C	±0.05	%/K
t_r	Response time of I_{PN}	<3	µs
di/dt	di/dt @optimal magnetic coupling	>50	A/µs
f	Frequency range (-1 dB)	DC ... 50	kHz
T_A	Ambient temperature range	-25 ... +85	°C
T_S	Storage temperature range	-25 ... +90	°C
m	Weight	≈0.2	kg
V_D	Test voltage, effective, 50 Hz, 1 min.	3.5	kV
V_B	Rated voltage[1)]	690	kV
	Standards	EN 50 178 EN 61 373	

Approvals / Marking

[1)] Safe separation (overvoltage category III, pollution degree 2)

HARTING Hall Effect Current Sensor HCME 100 A ... 800 A

I_{PN} = 100 A, 300 A, 500 A, 800 A

Identification	Part number	Drawing	Dimensions in mm
HCME 100 A	20 32 010 0101		
HCME 300 A	20 32 030 0101		
HCME 500 A	20 32 050 0101		
HCME 800 A	20 32 080 0101		
Connection: Metz Type 320 (PT11504VBBN) mating connector included (Metz SP04504VBNC)			

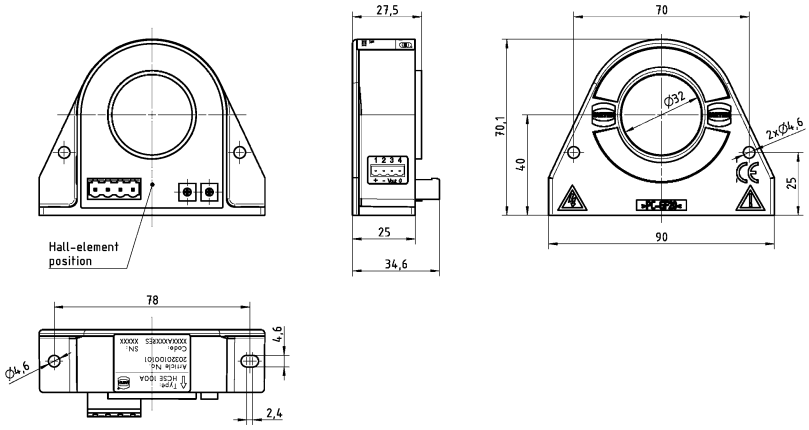

Definitions of technical characteristics for current sensors

	technical characteristics	Definitions
I_{PN}	Nominal primary current	RMS value for AC currents
I_{PM}	Primary current, measuring range	Maximum measureable current, short overloads <5 x I_{PM} do not damage the sensor but will cause an additional permanent offset. The Primary current, measuring range depends on the hight of the supply voltage and the burden resistance. See formular in line R_M
X	Accuracy @ I_{PN} T_A = 25°C	Total error in % of I_{PN} at T_A = 25 °C including offset at 25 °C and linearity deviation. Closed-loop current sensor: Total error in % over whole temperature range = X+ (I_{OT} [mA]/I_{SN}[mA] *100) Open-loop current sensor: Total error in % over whole temperature range = X+ max. Offset drift + max. gain drift = X + ((V_{OT}[mV/K]*60K)/V_{out}*100) + V_{outT}*60K
t_r	Response time of I_{PN}	Time difference in which the primary current and the measuring signal reach 90% of the end value
di/dt	di/dt @ optimal magnetic coupling	Maximum current rise rate correcly followed with an optimal magnetic coupling. Optimal magnetic coupling: Primary conductor is positioned in the middle of the sensor opening, no magnetic interference fields in the proximity of the sensor
f	Frequency range (-1dB)	Small signal frequency range of the sensor electronic, measureable harmonic waves. At higher frequencies of the primary current (>5 kHz, dependig on the sensor type) I_P has to be reduced to avoid overheating of the transformer. Maximum allowed temperature of the sensor is 120 °C.
R_M	Burden resistance	Closed-loop current sensors: The larger the burden resistance R_M the lower the Primary current, measuring range I_{PM} $I_{PM}=\frac{V_C - V_A}{Rm + Rs} \times N$ V_A = Voltage drop internal amplifier

V_A in V	200 A	300 A	500 A	1000 A	2000 A
HCM	1.6	2	2	2	0.8
HCMR			0.8	0.8	0.8

Remarks for current sensors

- If I_P flows in the direction of the arrow I_S is positive
- Over currents (»I_{PN}) or the missing of the supply voltage can cause an additional permanent magnetic offset
- The temperature of the primary conductor may not exceed 100 °C
- Standard interfaces with protection degree IP20

- These transformers may only be used in electrical or power electronic applications which fulfill the relevant regulations (standards, EMC requirements,…)

- Pay attention to protect non-insulated high-power current carrying parts against direct contact (e.g. with a protective enclosure)
- When installing this sensor please make sure that the safe separation (between primary circuit and secondary circuit) is maintained over the whole circuits and their connections
- The sensor may only be connected to a power supply respecting the SELV/PELV protective regulations according to EN 50 178. The installation of the power supply must be short-circuit-proof
- Disconnecting the main power must be possible
- The current sensors support a safe separation. The creepage and clearance distances are taken as a basis for the rated voltage. They are the shortest distance between the secondary connection and the sensor's window. The actual clearance and creepage distances depend on the position of the primary conductor respectively on the actual shortest distance between the primary conductor and the secondary connection

HARTING Current Transformer 4000/5 A

Features

- One-piece window type current transformer for tariff metering
- Calibrated with certificate without corrigendum
- Calibrated by an accredited test laboratory for electrical meters on request
- Including primary bus bar clamp and secondary termination cover

Technical characteristics

Approvals		DIN EN 61 869-2 IEC 60 044-1	
I_{PN}	Rated current	4000	A
K_N	Primary / secondary turns ratio	4000 / 5	A
	Rated power	10	VA
	Class	E 0.5 FS 10	
f	Rated frequency	50 - 60	Hz
I_{th}	Thermal short time rated current	70 x I_{PN}	
I_{dyn}	Rated dynamic current	2.5 x I_{th}	
I_D	Rated continuous thermal current	1.2 x I_{PN}	
U_m	Highest voltage for equipment	0.72	kV
	Insulation level	3 kV / 1 min	
	Insulation class	B	
	Protection degree	IP65	
	Ambient temperature range	-25 ... +55	°C
m	Weight	ca. 3	kg
	Material enclosure	PC 15 % GF	
	Material potting	PU	

HARTING Current Transformer 4000/5 A

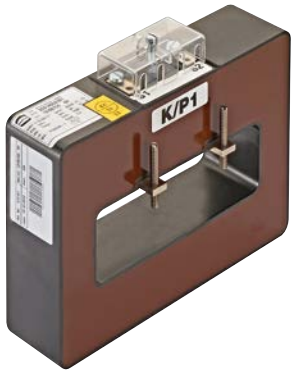

I_{PN} = 4000 A

Identification	Part number	Drawing	Dimensions in mm
Current transformer 4000/5 A	20 31 400 0101	1 Primary bus bar clamp (incl. screws) included in the delivery 2 Secondary termination cover (incl. screws) included in the delivery	

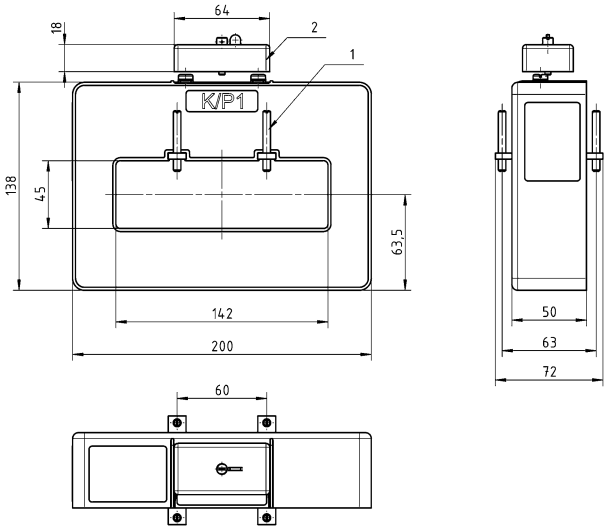

HARTING Current Transformer 7000/5 A

Features

- One-piece window type current transformer for tariff metering
- Calibrated with certificate without corrigendum
- Calibration by an accredited test laboratory for electrical meters on request
- Including primary bus bar clamp and secondary termination cover

Technical characteristics

Approvals		DIN EN 61 869-2 IEC 60 044-1	
I_{PN}	Rated current	7000	A
K_N	Primary / secondary turns ratio	7000 / 5	A
	Rated power	10	VA
	Class	E 0,2 FS 25	
f	Rated frequency	50	Hz
I_{th}	Thermal short time rated current	100 kA / 1 s	
I_{dyn}	Rated dynamic current	2.5 x I_{th}	
I_D	Rated continuous thermal current	1 x I_{PN}	
U_m	Highest voltage for equipment	0.72	kV
	Insulation level	3 kV / 1 min	
	Insulation class	B	
	Protection degree	IP65	
	Ambient temperature range	-25 ... +55	°C
m	Weight	ca. 7,2	kg
	Material enclosure	PC 15 % GF	
	Material potting	PU	

HARTING Current Transformer 7000/5 A

I_{PN} = 7000 A

Identification	Part number	Drawing	Dimensions in mm
Current transformer 7000/5 A	20 31 700 0101	1 Primary bus bar clamp (incl. screws) included in the delivery 2 Secondary termination cover (incl. screws) included in the delivery	

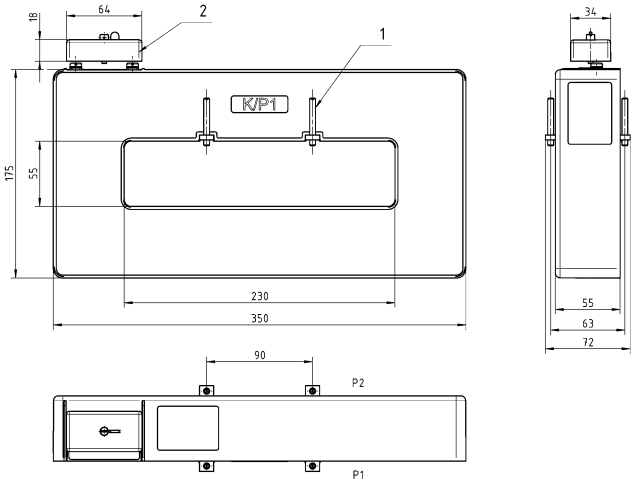

HARTING Residual Current Transformer 10 A

Features

- One-piece through-hole transformer for differential current measurement
- Max. cable diameter ≈110 mm
- *HARAX*® insulation displacement termination for easy assembly
- Optimised enclosure for high holding forces up to 250 kg
- Increased degree of protection (IP65)

Definition

HARTING residual current transformers – very robust and accurate

Residual current transformers detect fault (residual) currents at an early stage. They then generate output signals that can be used to take the necessary troubleshooting action before a protective mechanism is triggered that stops the facility. HARTING's residual current transformers are used to measure alternating currents. The one-piece through-hole transformer from HARTING detects residual currents in single-phase or multi-phase power supplies. This component measures the difference between the currents in the forward and return lines to the energy consumers.

Technical characteristics

Approvals		DIN EN 61 557-11 DIN EN 62 020 DIN EN 61 869-1 DIN EN 61 869-2	
I_{PN}	Nominal primary current	10	A
K_N	Turns ratio	1 : 600	
	Power	0.05	VA
	Class	3	
f	Frequency range	5 - 400	Hz
I_{th}	Thermal short time rated current	60 kA für 1 s	
	Insulation level	3	KV
	Insulation class	E	
	Protection degree	IP65	
	Ambient temperature range	-15 ... +55	°C
m	Weight	1.9	kg
	Material enclosure	PA66-Gf25	

HARTING Residual Current Transformer 10 A

I_{PN} = 10 A

Identification	Part number	Drawing	Dimensions in mm
Residual current transformer 10 A	20 32 001 7101	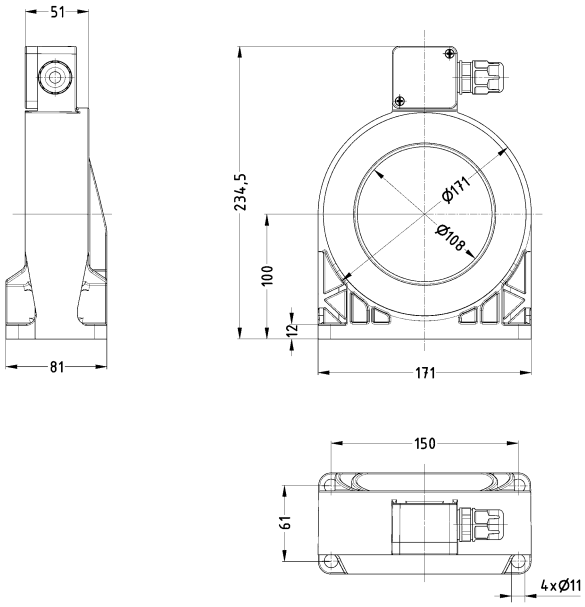	

Pushing Performance

www.HARTING.ae
www.HARTING.at
www.HARTING.com.au
www.HARTING.be
www.HARTING.com.br
www.HARTING.ca
www.HARTING.ch
www.HARTING.com.cn
www.HARTING.cz
www.HARTING.de
www.HARTING.dk
www.HARTING.es
www.HARTING.fi
www.HARTING.fr
www.HARTING.co.uk
www.HARTING.com.hk
www.HARTING.hu
www.HARTING.co.in
www.HARTING.it
www.HARTING.co.jp
www.HARTING.co.kr
www.HARTINGbv.nl
www.HARTING.no
www.HARTING.pl
www.HARTING.pt
www.HARTING.ro
www.HARTING.ru
www.HARTING.se
www.HARTING.sg
www.HARTING.sk
www.HARTING.com.tr
www.HARTING.com.tw
www.HARTING-USA.com
www.HARTING.co.za

HARTING.com –
the gateway to your
local website.

HARTING Technology Group
info@HARTING.com
www.HARTING.com

2017-07-01 98 42 938 0201 Version 38 4